Stealth

www.imparpromo.cz

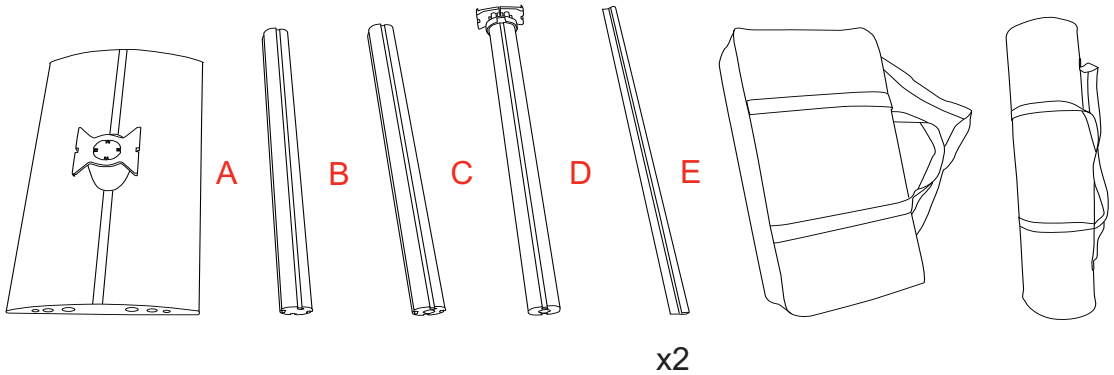

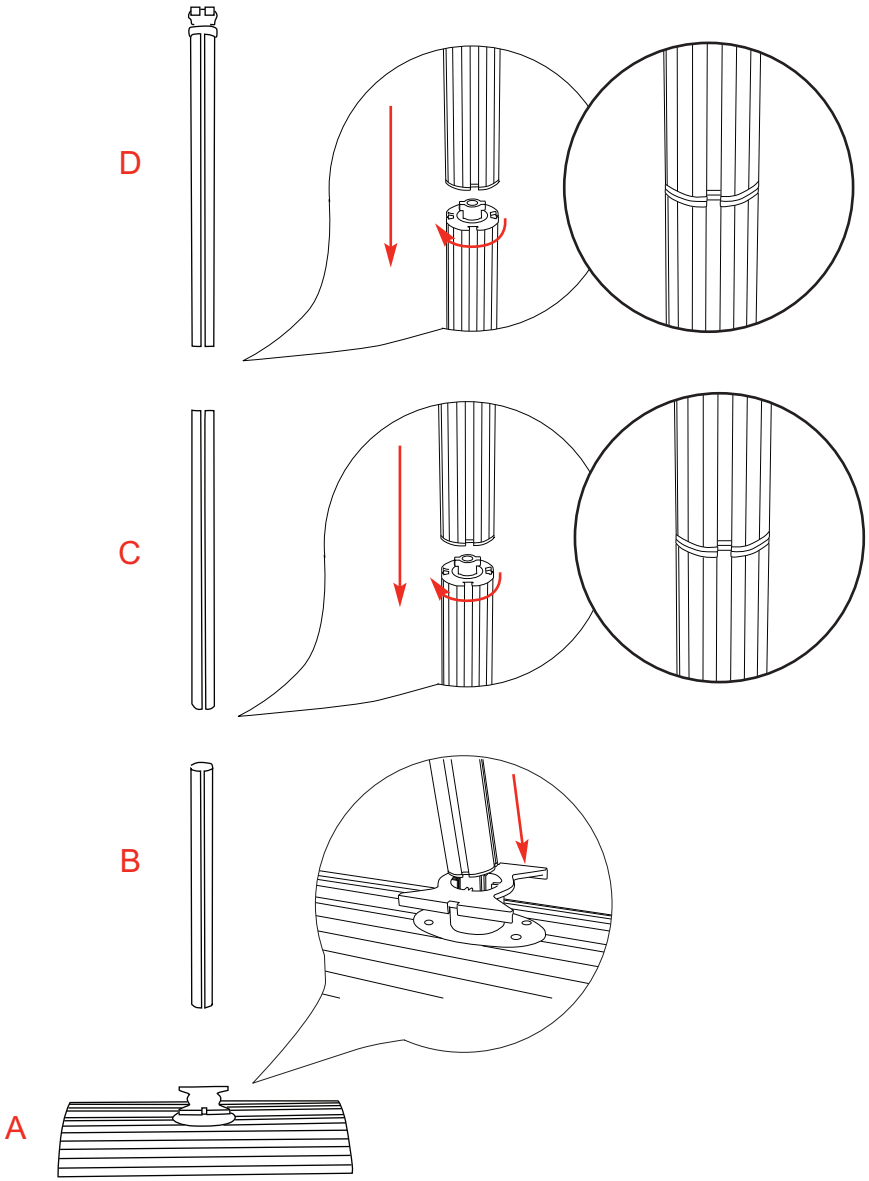
D
C
B
A

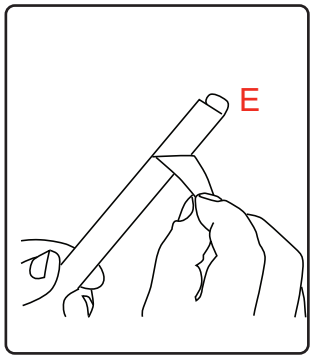
E

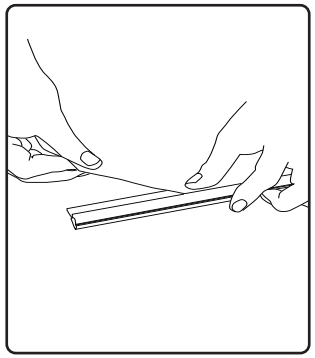

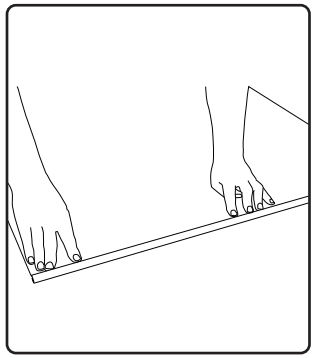

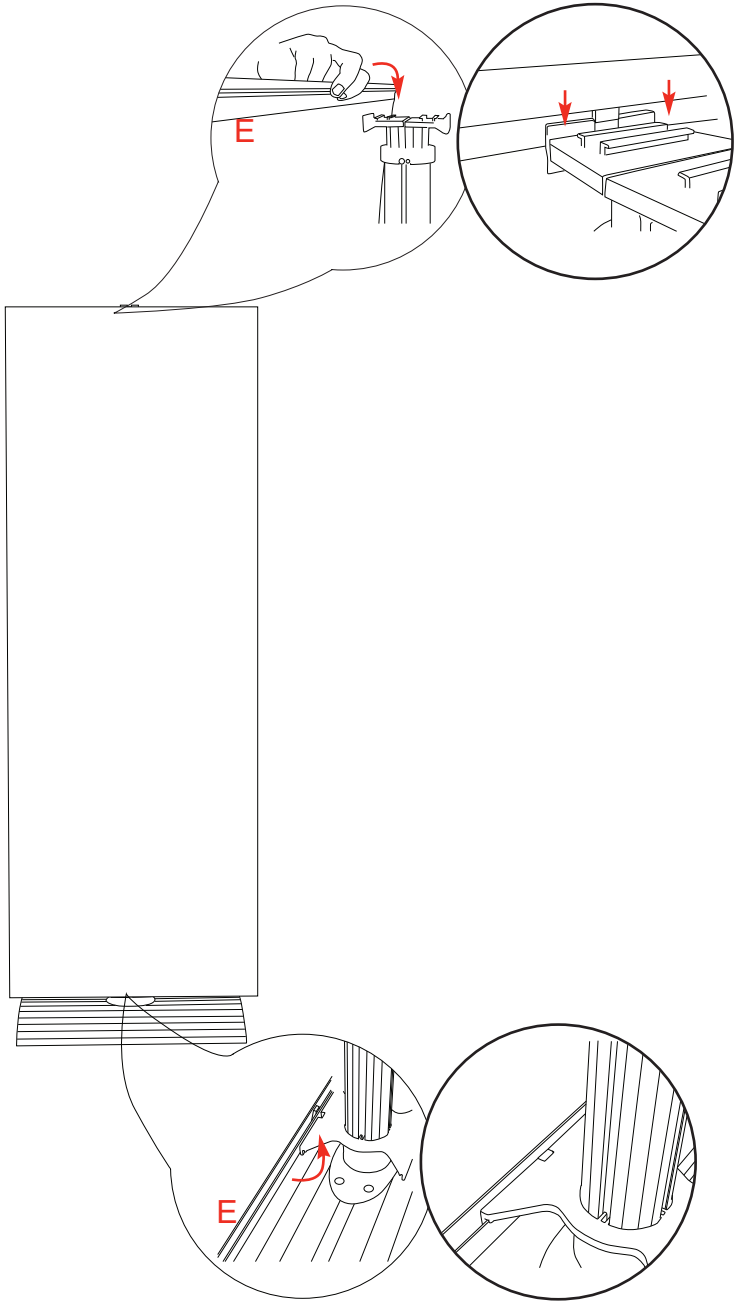
E
E

Flexi Panel option
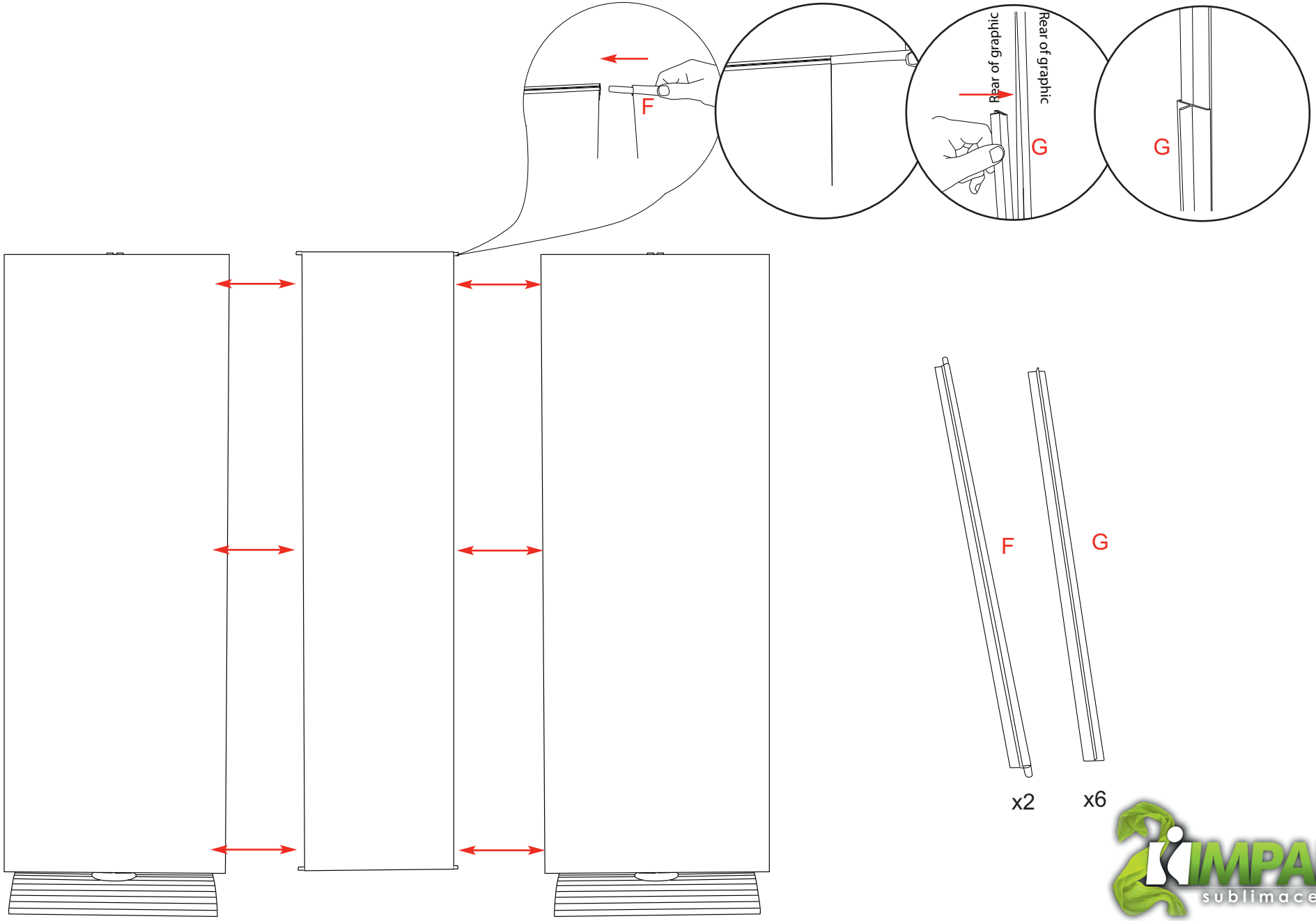
www.imparpromo.cz